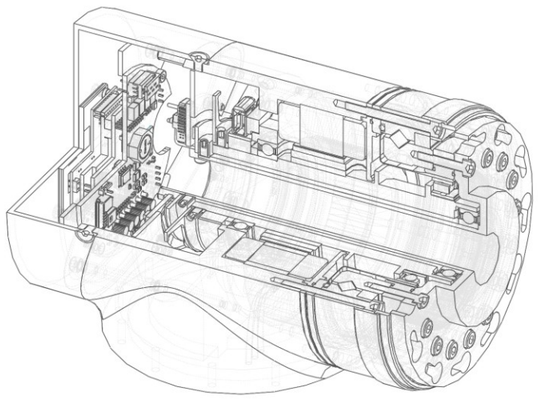

KOFON

KOFON

Strain Wave Gear

Product Catelouge

The Perpetual Motion
to Drive the World

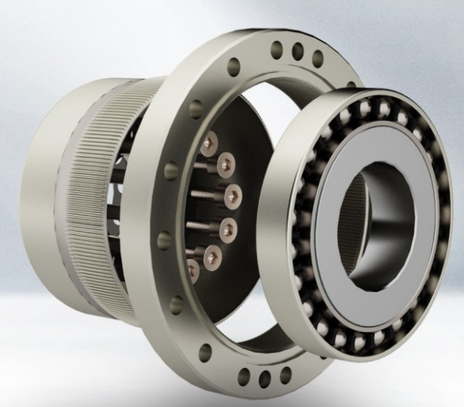

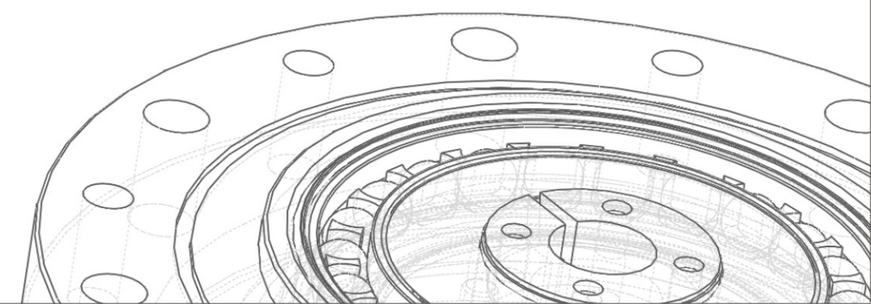

- The strain wave gears are the unique gearing playing important roles in the industrial and scientific technologies field like robots, semiconductor manufacturing systems, medical equipment, factory automation equipment, measuring equipment, printing machines .....
- Furthermore, the strain wave gears also offer many advantages in various applications of electro-mechanical products units that require high precision motion control.
- Kofon Motion Technology is dedicated to offer global customers high precision motion mechanical gearing solutions.

Content

The Company

Kofon Motion was established in 1998 and focus on the high precision gearboxes manufacturing. The continuous critical major investments in R&D, engineering, manufacturing facilities, top level tooling machines and a group of skilled technicians follows for strain wave gears and high precision servo planetary gearboxes.

Till now, Kofon Motion offers millions of precision gears globally and support hundreds industrial applications for precision motion demands.

The History

The strain wave gear was invented by Walton Musser in 1957. It was firstly applied in the electrically-driven wheels of the Apollo Lunar Rover. Through 60 years development, now in various applications in high level industry.

The Operational Principle

The flex-spline is slightly smaller in diameter than the circular-spline resulting in it having two fewer teeth on its outer circumference. It is held in an elliptical shape by the wave-generator and its teeth engage with the teeth of the circular-spline across the major axis of the ellipse.

When the wave-generator starts to rotate clockwise, the zone of tooth engagement travels with the major elliptical axis. When the wave- generator has turned through 180 degrees clockwise the flex-spline has regressed by one tooth relative to the circular-spline. Each turn of the wave-generator moves the flex-spline two teeth anti-clockwise relative to the circular-spline.

As its unique operational principle applying elastodynamics of metals, the strain wave gear tooth behavior can achieve free backlash motion and high positioning repeat-ability. More than 30% of all teeth engages in two locations in 180° symmetry to reach high efficiency and high torque capability.

The Components

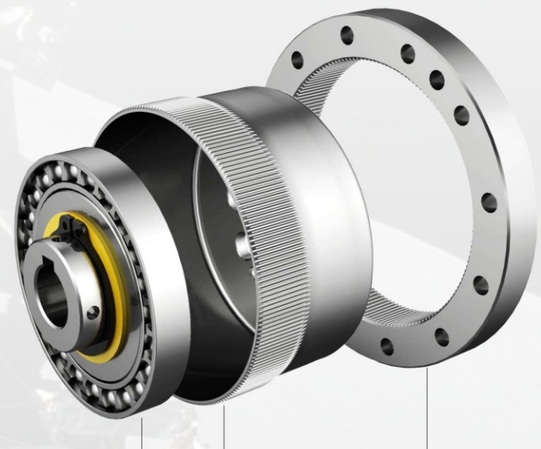

Wave-Generator

The wave-generator is a shin raced ball bearing fitted onto an elliptical cam. Normally it is mounted onto the input shaft. The output cam can be customized as per the specific application request.

Circular-Spline

The circular-spline is a rigid ring with internal teeth, engaging the teeth of the flex-spline across the major axis of the wave-generator. The circular-spline has two more teeth than the flex-spline and is mounted onto housing.

Flex-Spline

The flex-spline is a non-rigid, thin cylindrical cup with external teeth on a slightly smaller diameter than the circular-spline. It fits over and is held in an elliptical shape by the wave-generator.

Drive Arrangement

Numerous differential functions can be obtained by combinations of the speed and rotational direction of the three basic elements.

Reduction Gearing System

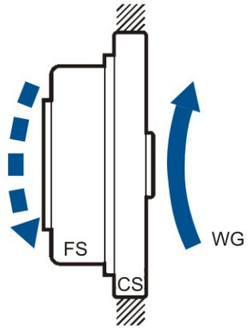

1) Reduction Gearing System
Wave-Generator (WG): Input
Circular-Spline (CS) : Fixed
Flex-Spline (FS): Output

$$i = \frac{-1}{R} = \frac{Zr\text{-}Zg}{Zr} = \frac{-2}{Zr}$$

i: ratio
Zr: FS teeth number
Zg: CS teeth number

Input and output rotate in opposite directions.

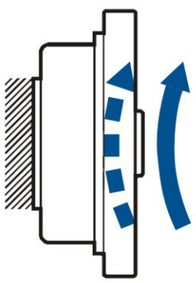

2) Reduction Gearing System
Wave-Generator (WG): Input
Circular-Spline (CS) : Output
Flex-Spline (FS): Fixed

$$i = \frac{1}{R+1} = \frac{1}{0.5Zr + 1}$$

i: ratio
Zr: FS teeth number
Zg: CS teeth number

Input and output rotate in the same direction.

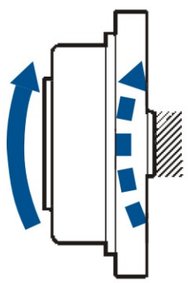

3) Reduction Gearing System
Wave-Generator (WG): Fixed
Circular-Spline (CS) : Output
Flex-Spline (FS): Input

$$i = \frac{R}{R+1} = \frac{0.5Zr}{0.5Zr + 1}$$

i: ratio
Zr: FS teeth number
Zg: CS teeth number

Input and output rotate in the same direction.

Speed Increaser Gearing System

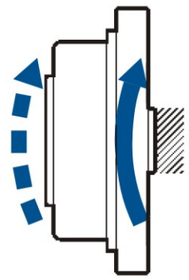

1) Speed Increaser Gearing System
Wave-Generator (WG): Fixed
Circular-Spline (CS) : Input
Flex-Spline (FS): Output

$$i = \frac{R+1}{R} = \frac{0.5Zr + 1}{0.5Zr}$$

i: ratio
Zr: FS teeth number
Zg: CS teeth number

Input and output rotate in the same direction.

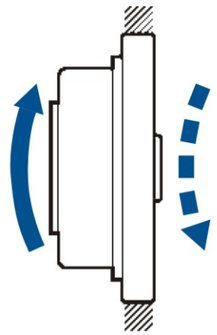

2) Speed Increaser Gearing System
Wave-Generator (WG): Output
Circular-Spline (CS) : Fixed
Flex-Spline (FS): Input

$$i = -R = 0.5Zr$$

i: ratio
Zr: FS teeth number
Zg: CS teeth number

Input and output rotate in opposite directions.

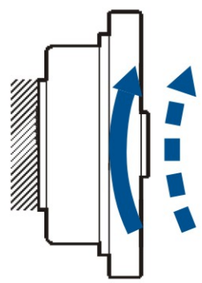

3) Speed Increaser Gearing System
Wave-Generator (WG): Output
Circular-Spline (CS) : Input
Flex-Spline (FS): Fixed

$$i = R + 1 = 0.5Zr + 1$$

i: ratio
Zr: FS teeth number
Zg: CS teeth number

Input and output rotate in same directions.

The Advantages

Since power is transmitted through multiple tooth engagement, strain wave gear offers high output torque capacity.

Strain wave gears exhibit very high torsional stiffness over the whole torque range, as well as almost linear hysteresis behaviour.

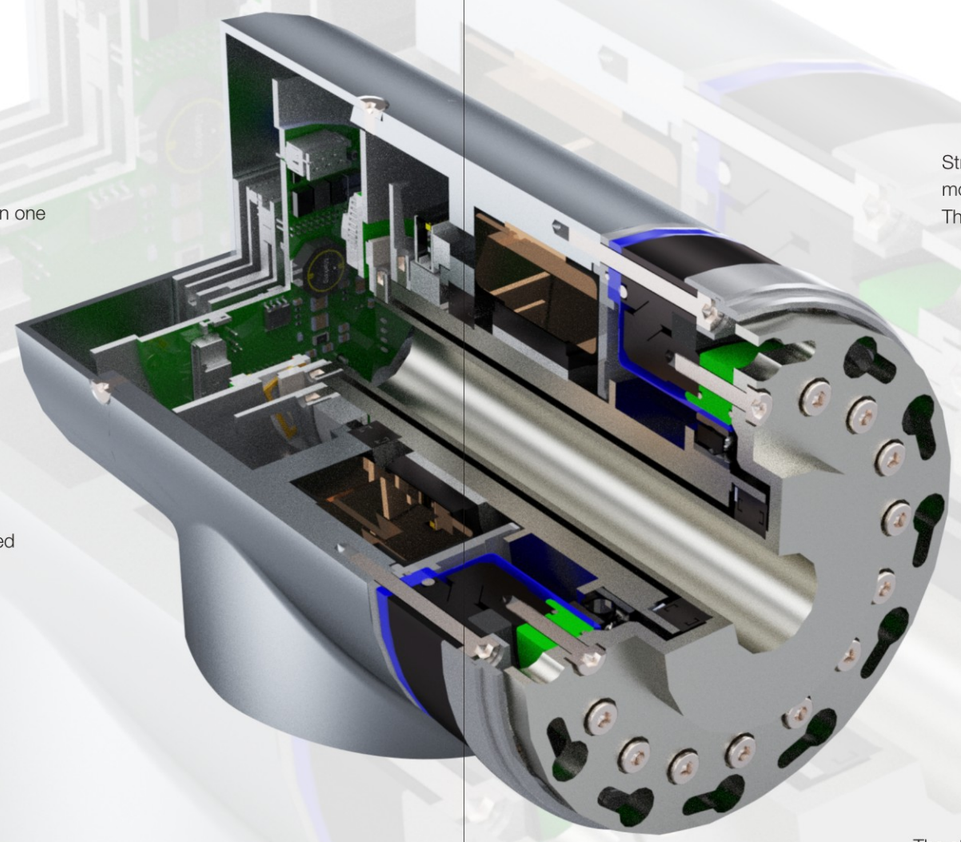

Strain wave gears are backlash-free. Positioning accuracy can be within one arc-min. Repeatability accuracy can be within 5 arc-sec.

Strain wave gearing the teeth come in contact with an almost pure-radial motion, and have essentially zero sliding velocity, even at high input speeds. This results in minimal wear and long operating life.

Strain wave gear units are reversible and can be used for speed increase as well as speed reduction.

High efficiency be available up to 85 %.

With only three elements high single stage reduction ratios ranging from 50:1 to 320:1 can be achieved.

The strain wave gears can provide the option of a central hollow shaft which can be used to pass cables, shafts through the centre of the gear.

Industrial Applications

Robots

Machine
- Industrial robots
- Robot peripheral equipment
- Collaborative robots
- Scara robots

Applications
- Indirect drive
- Hand drive
- Traveling shaft drive
- Precision joint drive

Metal Tooling Machines

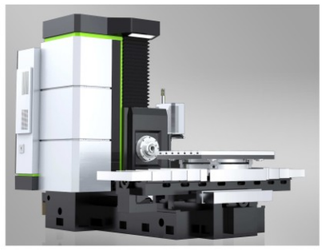

Machine
- Machining center
- Grinding machine
- EDM systems

Applications
- Tool revolver drive
- Tool change drive
- Tool Manazine drive
- Work positioning drive
- Rotary table drive
- Tool positioning device drive
- Direct transmission shaft drive
- Other shaft drive

Printing and Paper Processing Machines

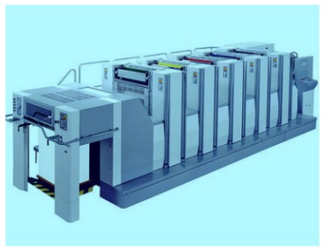

Machine
- Printing machine
- Folding machine
- Paper changing machine

Applications
- Tension controller
- Cutting blad positioning device
- Phase adjusting device
- Paper surface/back controlling device
- Roller position adjusting device
- Roller height adjustment device

Semiconductor Manufacturing Systems

Machine
- Mask manufacturing equipment
- Reticule manufacturing equipment
- Wafer fabrication system
- Wafer processing system
- Assembly system
- Inspection system
- Work transfer system

Applications
- Transfer system
- Positioning drive
- Indexing table
- Direct transmission table
- Work reversing device
- Tension controller device
- Hatch open/close drive

Measurement, Analytical and Test Systems

Machine
- Photometric equipment
- Three dimensional measuring instrument
- Metal tensile test machine

Applications
- Transfer system
- Positioning drive
- Prism positioning drive
- Indexing table
- Work reversing device

Medical Equipments

Machine
- Medical Equipments
- Three-dimensional manipulator
- X-ray photographing system
- CT system
- X-ray film developing machine
- X-ray film take-off machine
- Surgical operation assistant robot

Applications
- Precision joint drive
- Bed lifting drive
- Bed inclination drive
- Positioning table drive

Optical Machines

Machine
- X-ray analytical system
- Optical component inspection system
- Laser oscillation machine
- Optical measuring instrument
- Surface inspection system
- Optical disc manufacturing system
- Laser marker machine

Applications
- Positioning table drive
- Lens positioning drive
- Laser mirror drive
- Prism drive
- Probe drive
- Sensor positioning drive

Wood, Light Metal and Plastic Tooling Machine

Machine
- Wood working machine
- 5 axis machining center
- Large 3D processing machine
- Work transfer system

Applications
- Milling head drive
- Tool revolver drive
- Tool changer drive
- Tool magazine drive
- Work positioning device
- Rotray table drive
- Tool positioning device drive
- Direct transmission shaft drive
- Other shaft drive

Paper Making Machine

Machine
- Paper making machine
- Corrugated fiberboard box making machine
- Corrugated fiberboard box printing machine

Applications
- Coating process roller positioning drive
- Paper thickness adjusting mechanism drive
- Cutter knife positioning
- Cutter knife traveling drive

Crating and Packing Machines

Machine
- Sealing machine
- Label printing machine
- Label attaching machine
- Packing robot
- Work transfer system

Applications
- Shaft synchronizing drive
- Roll synchronizing drive
- Joint drive
- Trolley drive

Flat Panel Display Manufacturing Systems

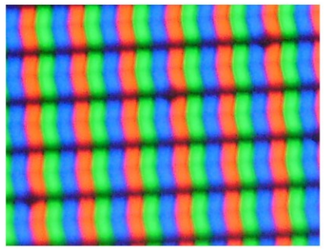

Machine
- Array process equipment
- Cell process equipment
- Assembly process equipment
- Work transfer system

Applications
- Transfer system
- Parts positioning drive
- Indexing table
- Direct transmission table
- Work reversing device
- Tension controller
- Hatch open/close drive
- Joint drive
- Trolley drive

PCB (Printed Circuit Board) Manufacturing Machines

Machine
- Electronic component insertion machine
- Cream solder printing machine
- Dispensers
- Board inspection systems
- Transfer system

Applications
- Milling head drive
- Tool revolver drive
- Tool changer drive
- Tool magazine drive
- Work positioning device
- Rotray table drive
- Tool positioning device drive
- Direct transmission shaft drive
- Other shaft drive

Strain Wave Gear C-MC Series Component Kit
Motor shaft closed flexspline

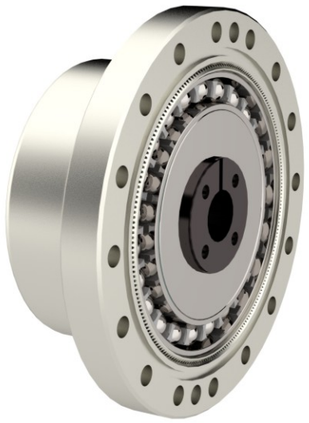

Advantages

- High positioning and rotational accuracy
- High repeatability accuracy
- High torque
- Super compact design
- Backlash free
- Long service life
- High torsional stiffness
- High efficiency
- Simple installation
- Flexible for application design

Main Applications

- Robots
- High Precision Tooling Machine
- High Precision Testing Equipment
- Medical Equipment
- Optical Equipment
- Analytical and Testing Equipment
- Semiconductor Manufacturing Systems
- Packing Machines

Ordering Code

Gear Series	Transmission Type	Gear Size	Ratios					Special Design
C	MC	14	50	80	100			as per customers' special requirements
		17	50	80	100	120		
		20	50	80	100	120	160	
		25	50	80	100	120	160	
		32	50	80	100	120	160	

Ordering Code								
C-MC	–	25	–	100	–	SP

Technical Specifications

Series	Size	Ratio	Max Output Torque	Average Output Torque	Rated Output Toruqe at rated speed 2000 rpm	Emergency Stop Torque	Max Input Speed	Average Input Speed	Moment of Inertia	Weight
			Nm	Nm	Nm	Nm	rpm	rpm	kgm^2	kg
C-MC	14	50	18	6,9	5,4	35	6000	3500	$0,27x10^{-5}$	0,09
		80	23	11	7,8	47				
		100	28	11	7,8	54				
	17	50	34	26	16	70	6000	3500	$0,66x10^{-5}$	0,14
		80	43	27	22	87				
		100	54	39	24	110				
		120	54	39	24	86				
	20	50	56	34	24	98	6000	3500	$0,16x10^{-4}$	0,23
		80	74	47	34	127				
		100	82	49	40	147				
		120	87	49	40	147				
		160	92	49	40	147				
	25	50	98	55	39	186	5600	3500	$0,36x10^{-4}$	0,38
		80	137	87	63	255				
		100	157	108	67	284				
		120	167	108	67	304				
		160	176	108	67	314				
	32	50	216	108	76	382	4800	3500	$1,35x10^{-4}$	0,87
		80	304	167	118	568				
		100	333	216	137	647				
		120	353	216	137	686				
		160	372	216	137	686				

Gear Dimensions

Component Kit C-MC-14

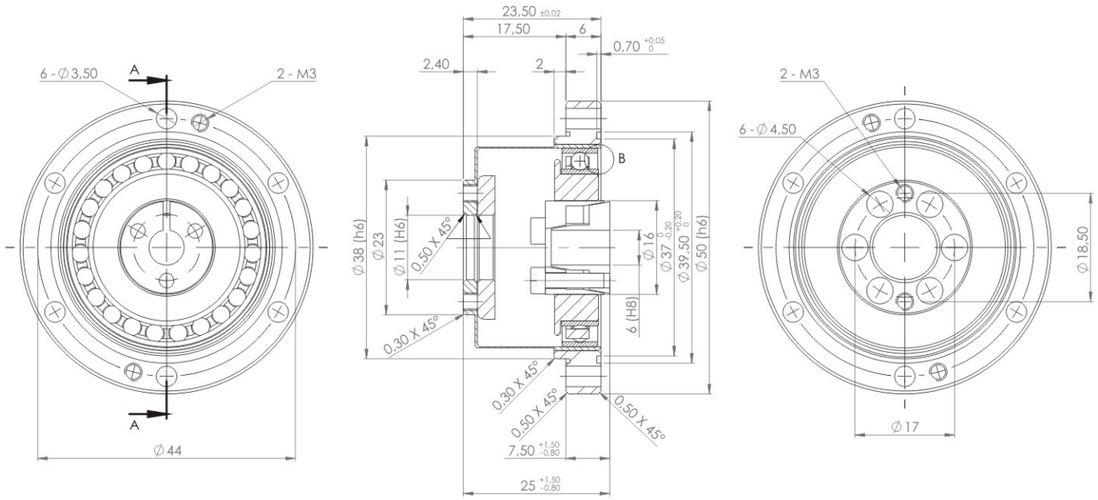

Component Kit C-MC-17

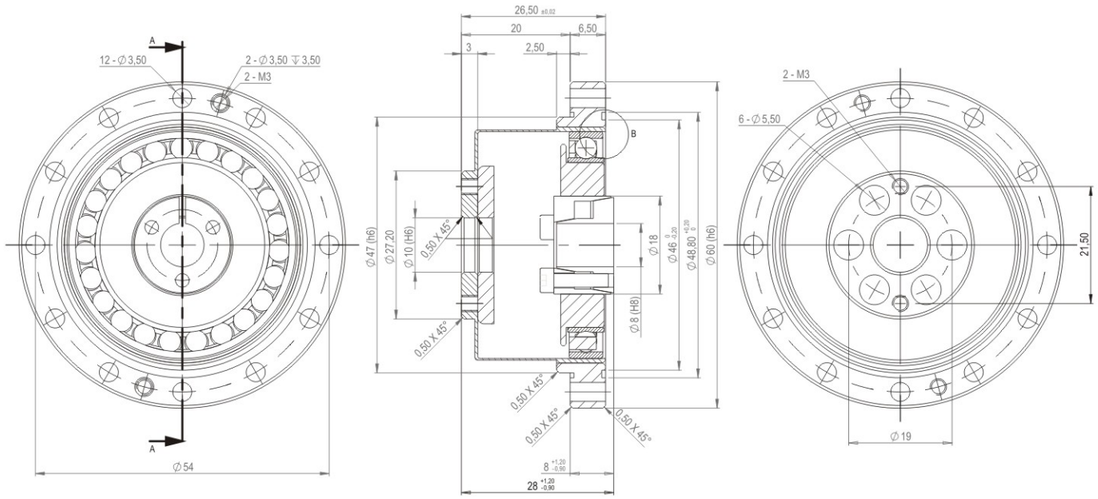

Component Kit C-MC-20

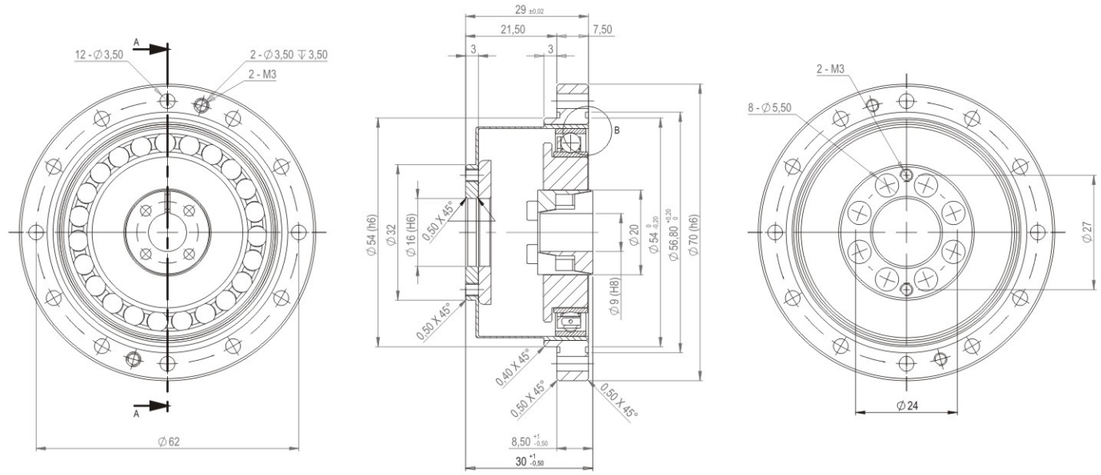

Component Kit C-MC-25

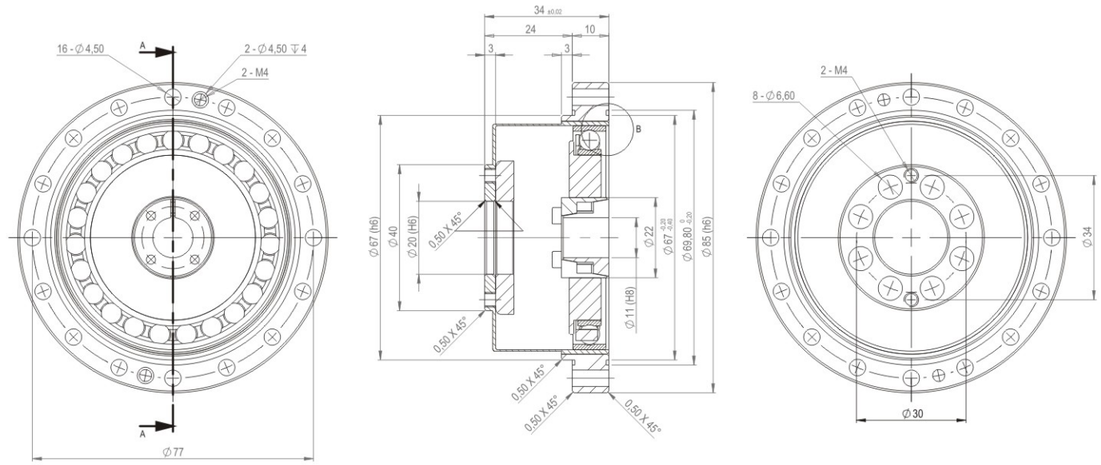

Component Kit C-MC-32

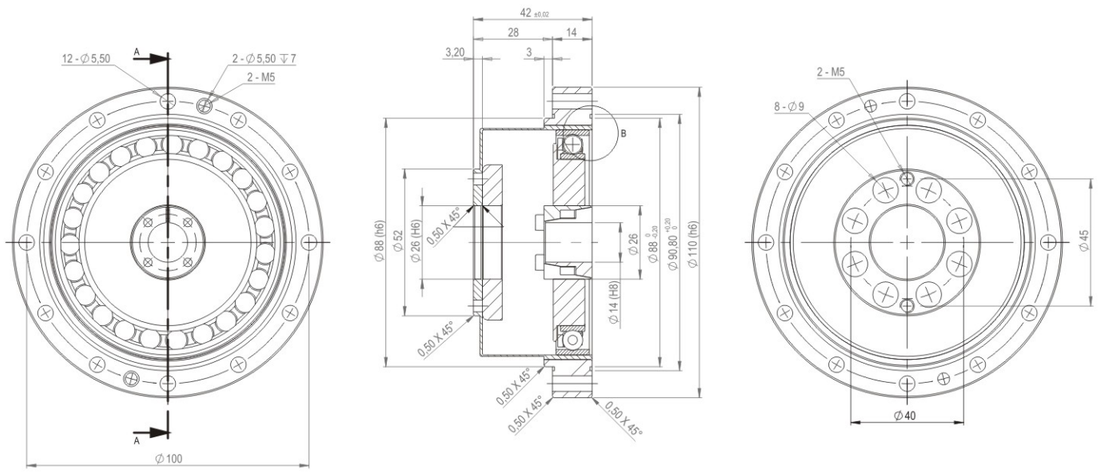

Technical Memo

Strain Wave Gear C-MC Series Component Kit
Motor shaft closed flexspline

Strain Wave Gear SB-MO Series Simplicity Box
Motor shaft open flexspline

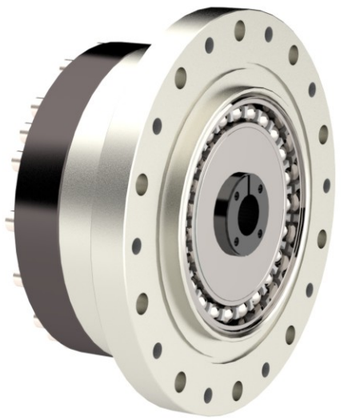

Advantages

- High positioning and rotational accuracy
- High repeatability accuracy
- High torque
- Super compact design
- Backlash free
- Long service life
- High torsional stiffness
- High efficiency
- Simple installation
- Flexible for application design

Main Applications

- Robots
- High Precision Tooling Machine
- High Precision Testing Equipment
- Medical Equipment
- Optical Equipment
- Analytical and Testing Equipment
- Semiconductor Manufacturing Systems
- Packing Machines

Ordering Code

Gear Series	Transmission Type	Gear Size	Ratios					Special Design
SB	MO	14	50	80	100			as per customers' special requirements
		17	50	80	100	120		
		20	50	80	100	120	160	
		25	50	80	100	120	160	
		32	50	80	100	120	160	

Ordering Code								
SB-MO	–	25	–	100	–	SP

Technical Specifications

Series	Size	Ratio	Max Output Torque	Average Output Torque	Rated Output Toruqe at rated speed 2000 rpm	Emergency Stop Torque	Max Input Speed	Average Input Speed	Moment of Inertia	Weight
			Nm	Nm	Nm	Nm	rpm	rpm	kgm^2	kg
SB-MO	14	50	18	6,9	5,4	35	6000	3500	$0,27x10^{-5}$	0,37
		80	23	11	7,8	47				
		100	28	11	7,8	54				
	17	50	34	26	16	70	6000	3500	$0,66x10^{-5}$	0,51
		80	43	27	22	87				
		100	54	39	24	110				
		120	54	39	24	86				
	20	50	56	34	24	98	6000	3500	$0,16x10^{-4}$	0,72
		80	74	47	34	127				
		100	82	49	40	147				
		120	87	49	40	147				
		160	92	49	40	147				
	25	50	98	55	39	186	5600	3500	$0,36x10^{-4}$	1,19
		80	137	87	63	255				
		100	157	108	67	284				
		120	167	108	67	304				
		160	176	108	67	314				
	32	50	216	108	76	382	4800	3500	$1,35x10^{-4}$	2,53
		80	304	167	118	568				
		100	333	216	137	647				
		120	353	216	137	686				
		160	372	216	137	686				

Gear Dimensions

Simplicity Box SB-MO-14

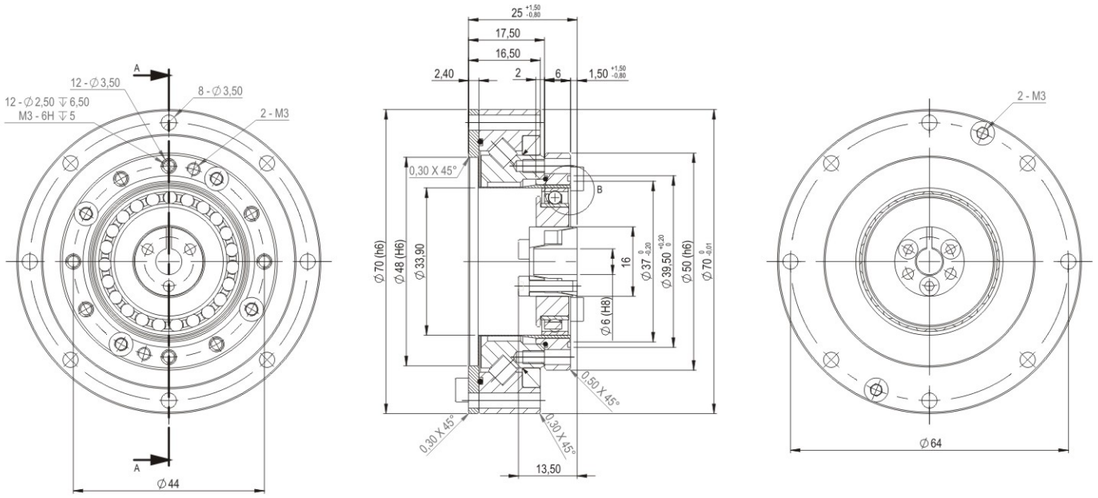

Simplicity Box SB-MO-17

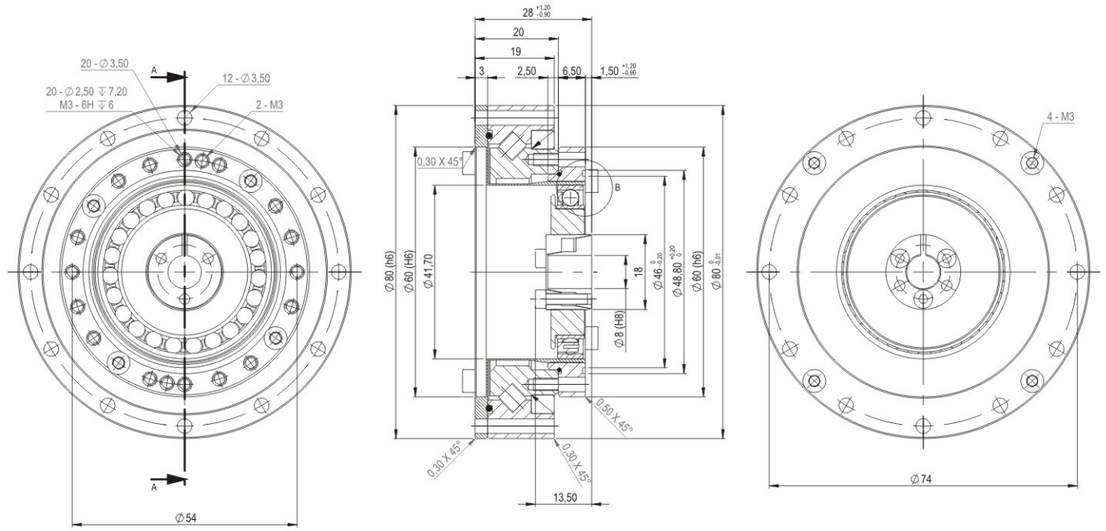

Simplicity Box SB-MO-20

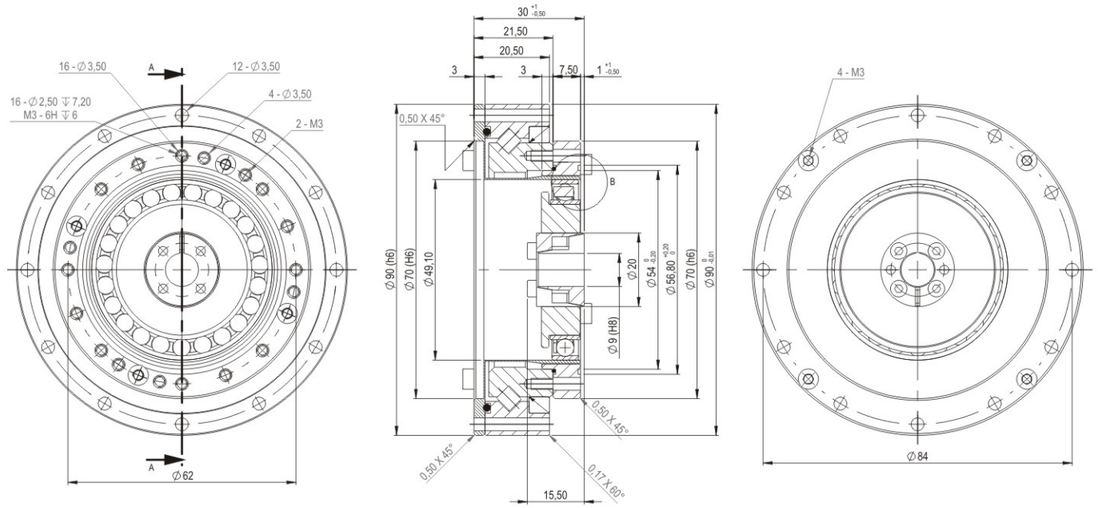

Simplicity Box SB-MO-25

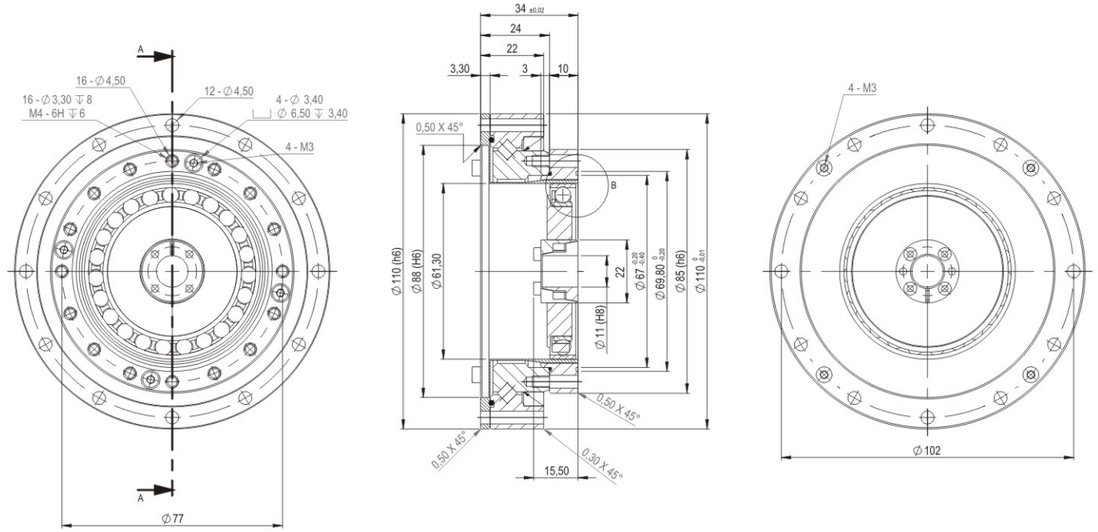

Strain Wave Gear SB-MO Series Simplicity Box
Motor shaft open flexspline

Simplicity Box SB-MO-32

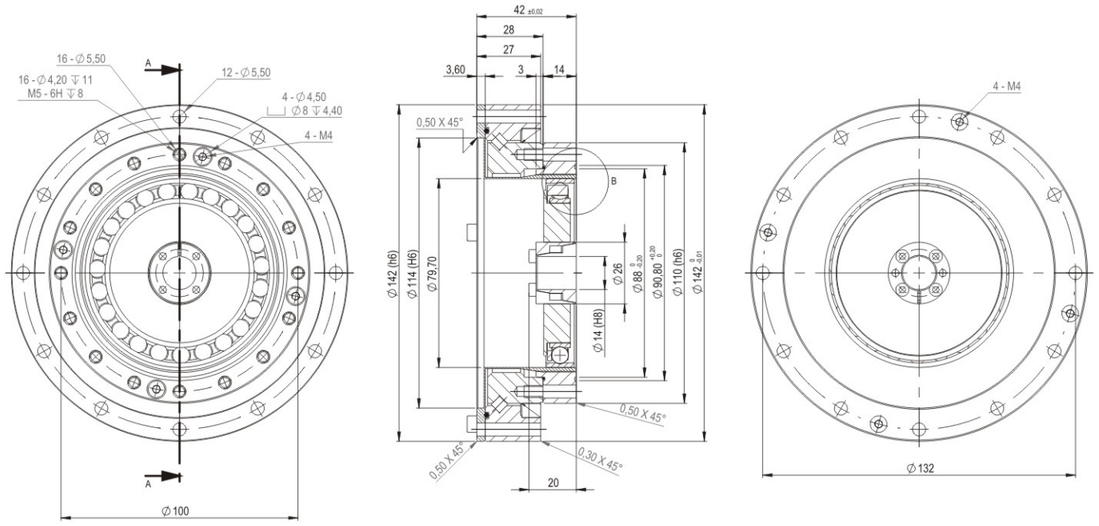

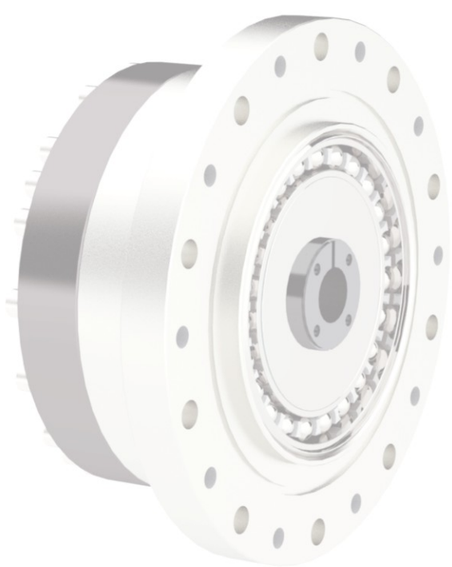

Technical Memo

Strain Wave Gear SB-MO Series Simplicity Box
Motor shaft open flexspline

Strain Wave Gear SB-HO Series Simplicity Box
Hollow shaft open flexspline

Advantages

- High positioning and rotational accuracy
- High repeatability accuracy
- High torque
- Super compact design
- Backlash free
- Long service life
- High torsional stiffness
- High efficiency
- Simple installation
- Flexible for application design

Main Applications

- Robots
- High Precision Tooling Machine
- High Precision Testing Equipment
- Medical Equipment
- Optical Equipment
- Analytical and Testing Equipment
- Semiconductor Manufacturing Systems
- Packing Machines

Ordering Code

Gear Series	Transmission Type	Gear Size	Ratios					Special Design
SB	HO	14	50	80	100			as per customers' special requirements
		17	50	80	100	120		
		20	50	80	100	120	160	
		25	50	80	100	120	160	
		32	50	80	100	120	160	

Ordering Code								
SB-HO	–	25	–	100	–	SP

Technical Specifications

Series	Size	Ratio	Max Output Torque	Average Output Torque	Rated Output Toruqe at rated speed 2000 rpm	Emergency Stop Torque	Max Input Speed	Average Input Speed	Moment of Inertia	Weight
			Nm	Nm	Nm	Nm	rpm	rpm	kgm^2	kg
SB-HO	14	50	18	6,9	5,4	35	6000	3500	$0,18x10^{-4}$	0,41
		80	23	11	7,8	47				
		100	28	11	7,8	54				
	17	50	34	26	16	70	6000	3500	$0,34x10^{-4}$	0,59
		80	43	27	22	87				
		100	54	39	24	110				
		120	54	39	24	86				
	20	50	56	34	24	98	6000	3500	$0,58x10^{-4}$	0,83
		80	74	47	34	127				
		100	82	49	40	147				
		120	87	49	40	147				
		160	92	49	40	147				
	25	50	98	55	39	186	5600	3500	$1,23x10^{-4}$	1,39
		80	137	87	63	255				
		100	157	108	67	284				
		120	167	108	67	304				
		160	176	108	67	314				
	32	50	216	108	76	382	4800	3500	$3,66x10^{-4}$	2,87
		80	304	167	118	568				
		100	333	216	137	647				
		120	353	216	137	686				
		160	372	216	137	686				

Gear Dimensions

Simplicity Box SB-HO-14

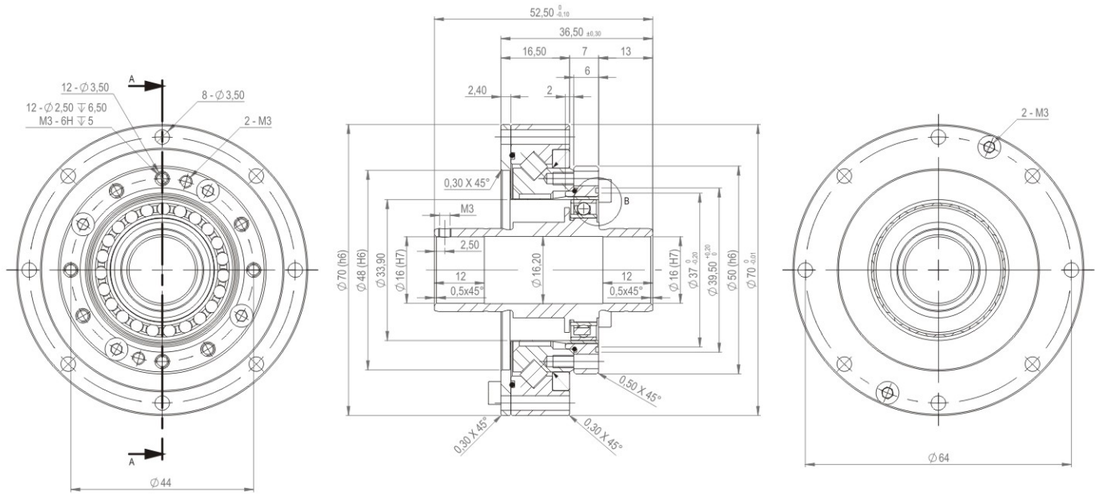

Simplicity Box SB-HO-17

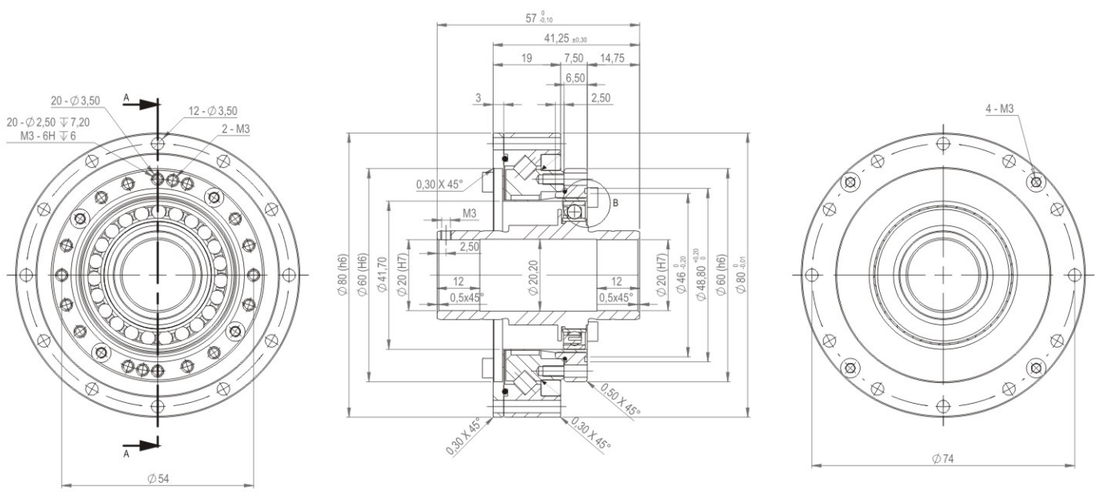

Simplicity Box SB-HO-20

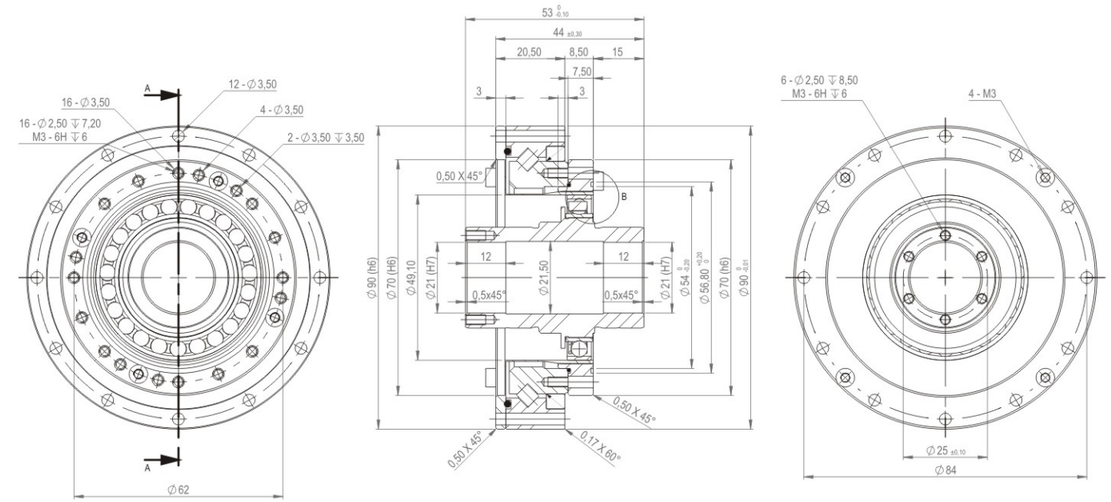

Simplicity Box SB-HO-25

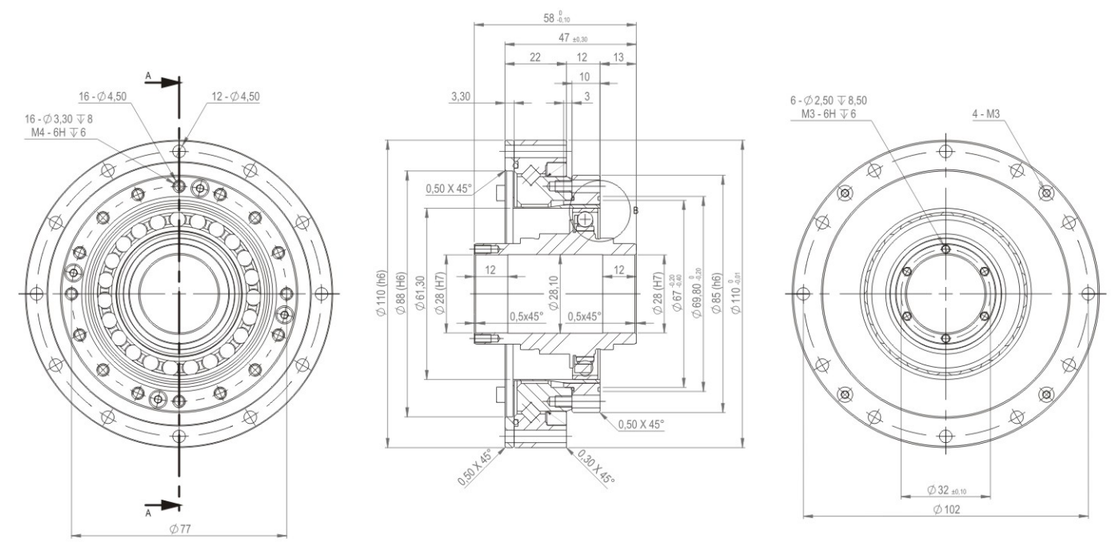

Strain Wave Gear SB-HO Series Simplicity Box
Hollow shaft open flexspline

Simplicity Box SB-HO-32

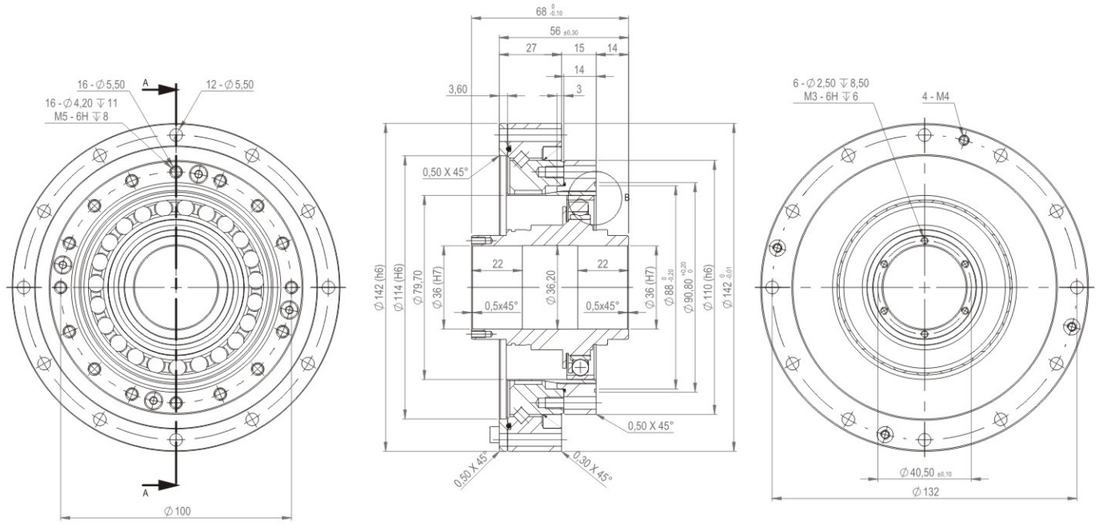

Technical Memo

Strain Wave Gear B-MC Series Box Unit
Motor shaft closed flexspline

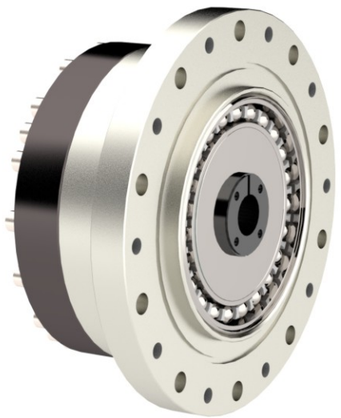

Advantages

- High positioning and rotational accuracy
- High repeatability accuracy
- High torque
- Super compact design
- Backlash free
- Long service life
- High torsional stiffness
- High efficiency
- Simple installation
- Flexible for application design

Main Applications

- Robots
- High Precision Tooling Machine
- High Precision Testing Equipment
- Medical Equipment
- Optical Equipment
- Analytical and Testing Equipment
- Semiconductor Manufacturing Systems
- Packing Machines

Ordering Code

Gear Series	Transmission Type	Gear Size	Ratios					Special Design
B	MC	14	50	80	100			as per customers' special requirements
		17	50	80	100	120		
		20	50	80	100	120	160	
		25	50	80	100	120	160	
		32	50	80	100	120	160	

Ordering Code								
B-MC	–	25	–	100	–	SP

Technical Specifications

Series	Size	Ratio	Max Output Torque	Average Output Torque	Rated Output Toruqe at rated speed 2000 rpm	Emergency Stop Torque	Max Input Speed	Average Input Speed	Moment of Inertia	Weight
			Nm	Nm	Nm	Nm	rpm	rpm	kgm^2	kg
B-MC	14	50	18	6,9	5,4	35	6000	3500	$0,27x10^{-5}$	0,49
		80	23	11	7,8	47				
		100	28	11	7,8	54				
	17	50	34	26	16	70	6000	3500	$0,66x10^{-5}$	0.62
		80	43	27	22	87				
		100	54	39	24	110				
		120	54	39	24	86				
	20	50	56	34	24	98	6000	3500	$0,16x10^{-4}$	0,89
		80	74	47	34	127				
		100	82	49	40	147				
		120	87	49	40	147				
		160	92	49	40	147				
	25	50	98	55	39	186	5600	3500	$0,36x10^{-4}$	1,39
		80	137	87	63	255				
		100	157	108	67	284				
		120	167	108	67	304				
		160	176	108	67	314				
	32	50	216	108	76	382	4800	3500	$1,35x10^{-4}$	3,02
		80	304	167	118	568				
		100	333	216	137	647				
		120	353	216	137	686				
		160	372	216	137	686				

Gear Dimensions

Box Unit B-MC-14

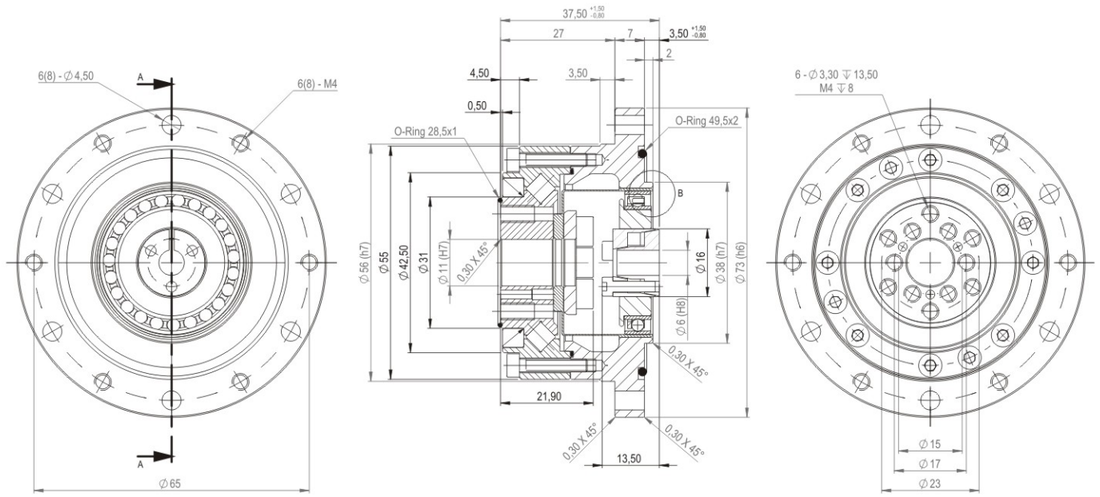

Box Unit B-MC-17

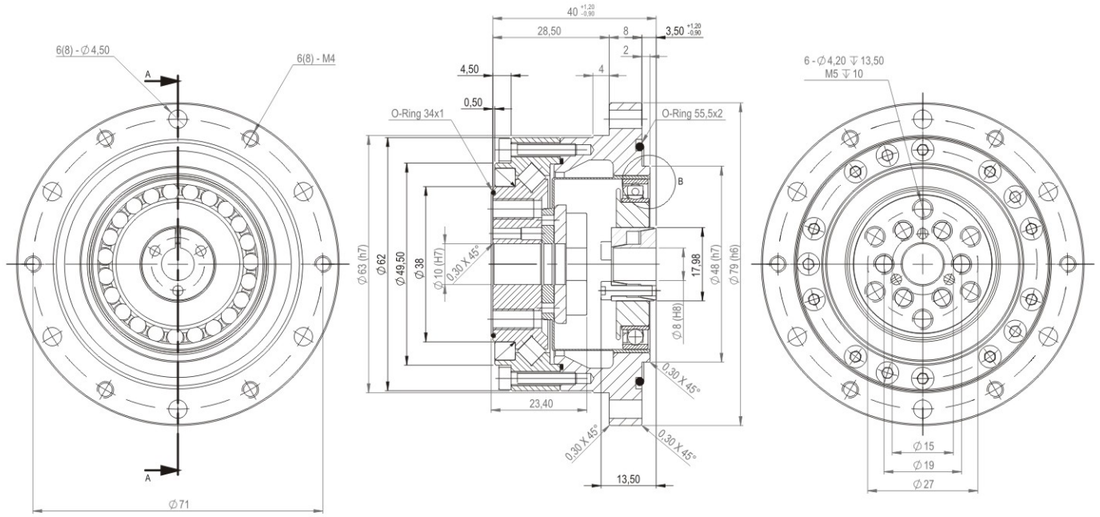

Box Unit B-MC-20

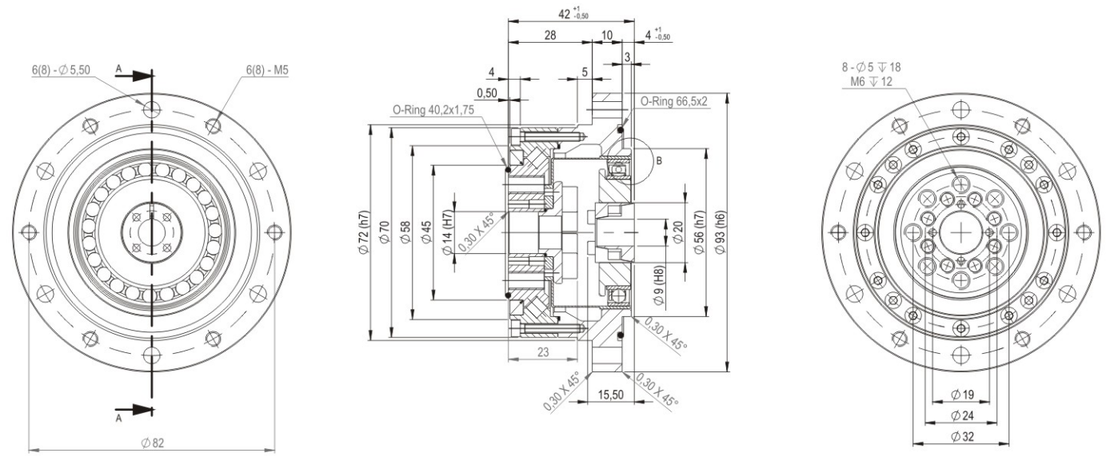

Box Unit B-MC-25

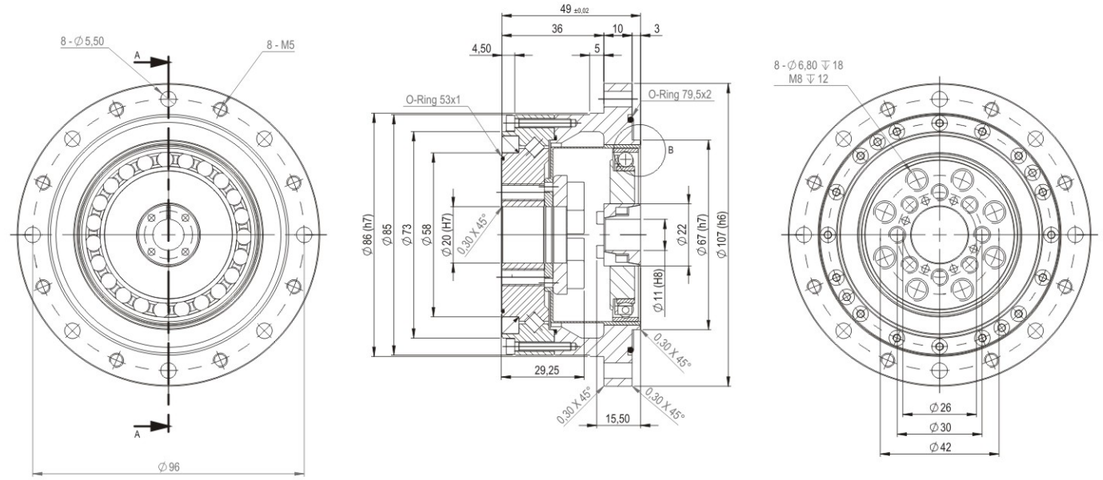

Strain Wave Gear B-MC Series Box Unit
Motor shaft closed flexspline

Box Unit B-MC-32

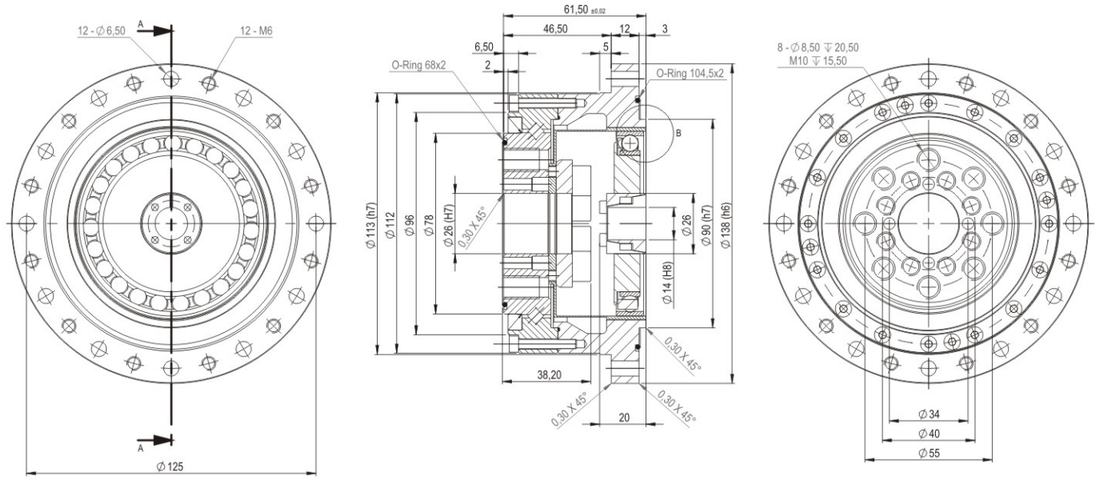

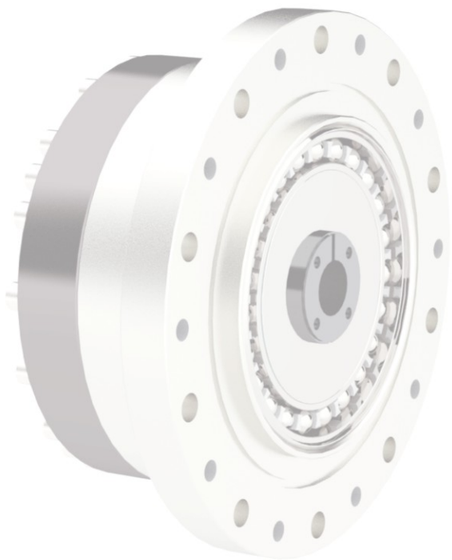

Technical Memo

Strain Wave Gear B-MC Series Box Unit
Motor shaft closed flexspline

Strain Wave Gear B-HO Series Box Unit
Hollow shaft open Flexspline

Advantages

- High positioning and rotational accuracy
- High repeatability accuracy
- High torque
- Super compact design
- Backlash free
- Long service life
- High torsional stiffness
- High efficiency
- Simple installation
- Flexible for application design

Main Applications

- Robots
- High Precision Tooling Machine
- High Precision Testing Equipment
- Medical Equipment
- Optical Equipment
- Analytical and Testing Equipment
- Semiconductor Manufacturing Systems
- Packing Machines

Ordering Code

Gear Series	Transmission Type	Gear Size	Ratios					Special Design
B	HO	14	50	80	100			as per customers' special requirements
		17	50	80	100	120		
		20	50	80	100	120	160	
		25	50	80	100	120	160	
		32	50	80	100	120	160	

Ordering Code								
B-HO	–	25	–	100	–	SP

Technical Specifications

Series	Size	Ratio	Max Output Torque	Average Output Torque	Rated Output Toruqe at rated speed 2000 rpm	Emergency Stop Torque	Max Input Speed	Average Input Speed	Moment of Inertia	Weight
			Nm	Nm	Nm	Nm	rpm	rpm	kgm^2	kg
B-HO	14	50	18	6,9	5,4	35	6000	3500	$0,18x10^{-4}$	0,67
		80	23	11	7,8	47				
		100	28	11	7,8	54				
	17	50	34	26	16	70	6000	3500	$0,34x10^{-4}$	0,82
		80	43	27	22	87				
		100	54	39	24	110				
		120	54	39	24	86				
	20	50	56	34	24	98	6000	3500	$0,58x10^{-4}$	1,09
		80	74	47	34	127				
		100	82	49	40	147				
		120	87	49	40	147				
		160	92	49	40	147				
	25	50	98	55	39	186	5600	3500	$1,23x10^{-4}$	2,05
		80	137	87	63	255				
		100	157	108	67	284				
		120	167	108	67	304				
		160	176	108	67	314				
	32	50	216	108	76	382	4800	3500	$3,66x10^{-4}$	3,89
		80	304	167	118	568				
		100	333	216	137	647				
		120	353	216	137	686				
		160	372	216	137	686				

Gear Dimensions

Box Unit B-HO-14

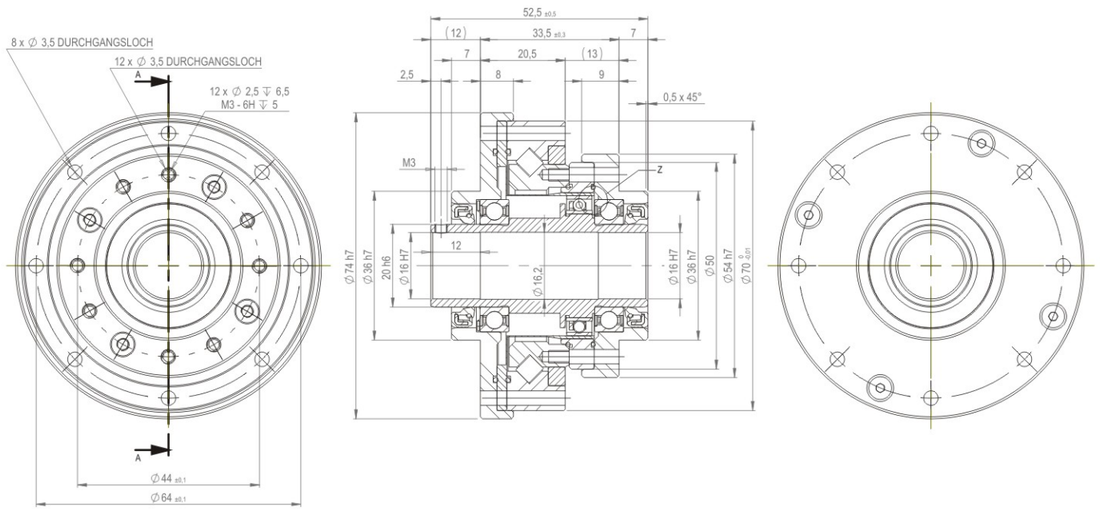

Box Unit B-HO-17

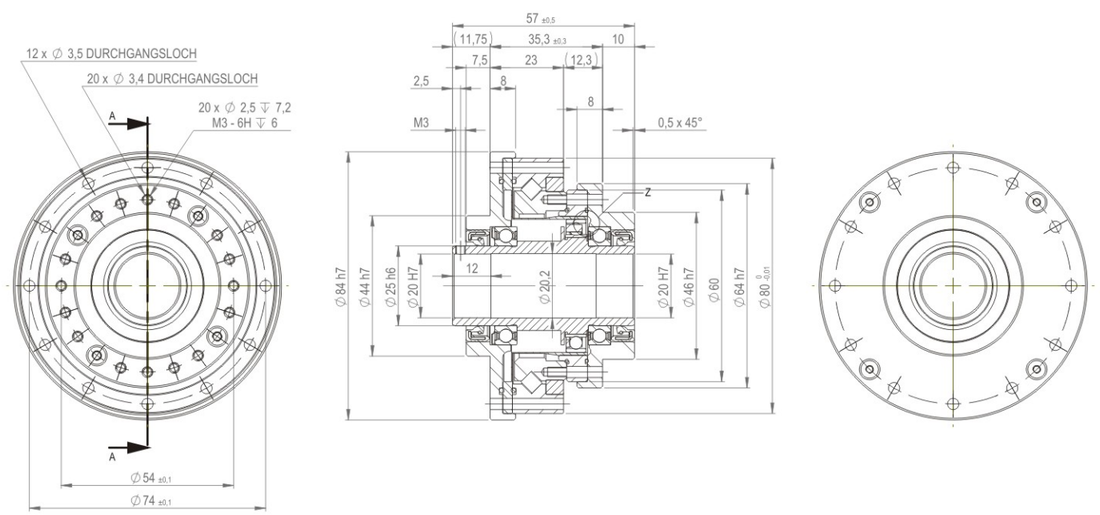

Box Unit B-HO-20

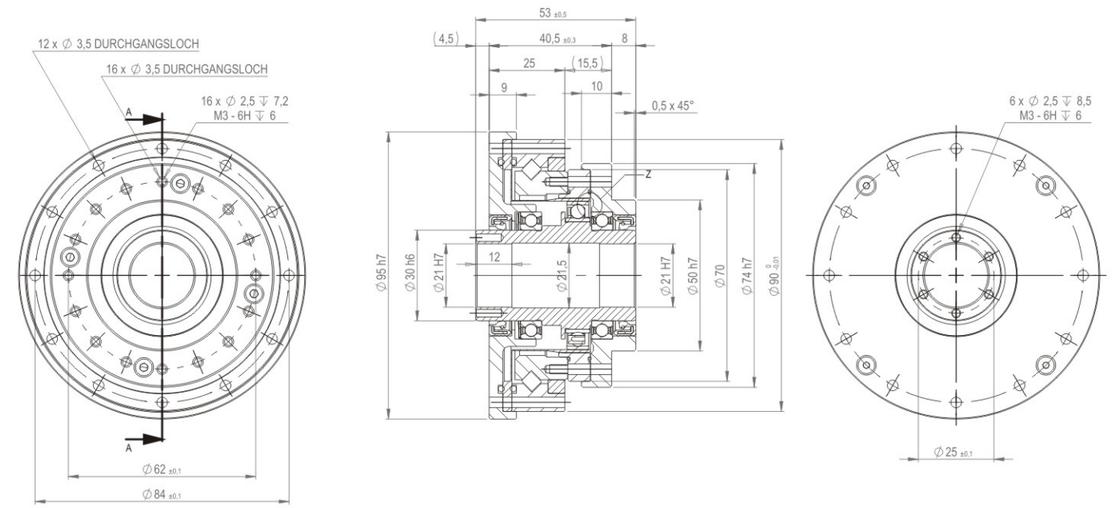

Box Unit B-HO-25

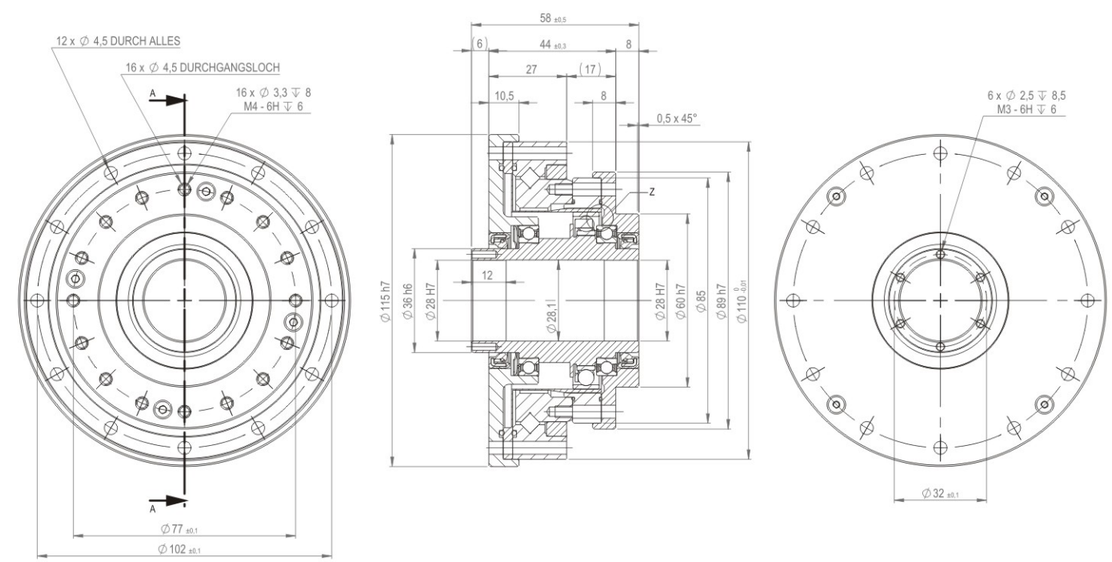

Strain Wave Gear B-HO Series Box Unit
Hollow shaft open Flexspline

Box Unit B-HO-32

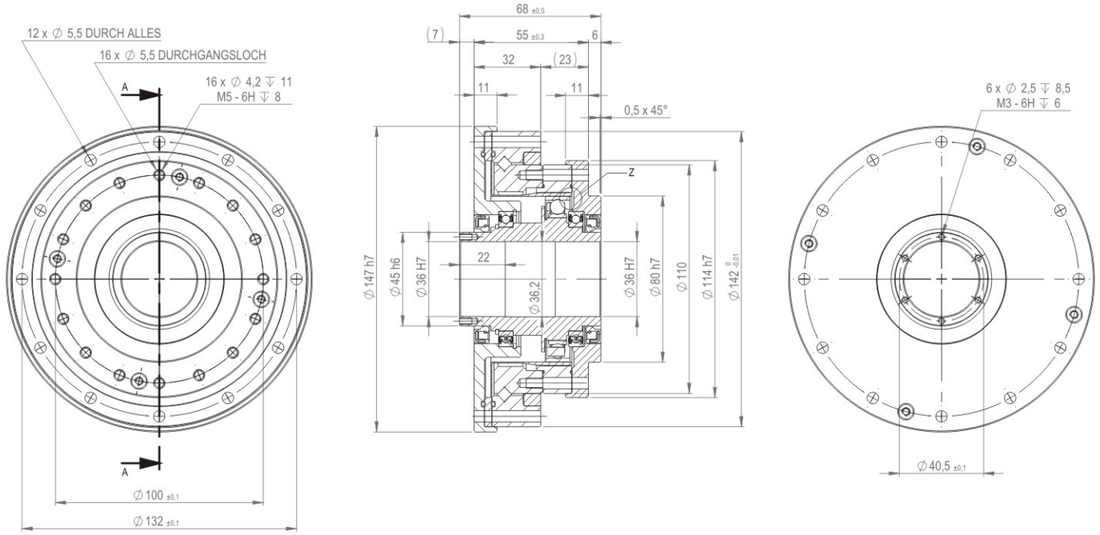

Technical Memo

Strain Wave Gear B-HO Series Box Unit
Hollow shaft open Flexspline

Service Life

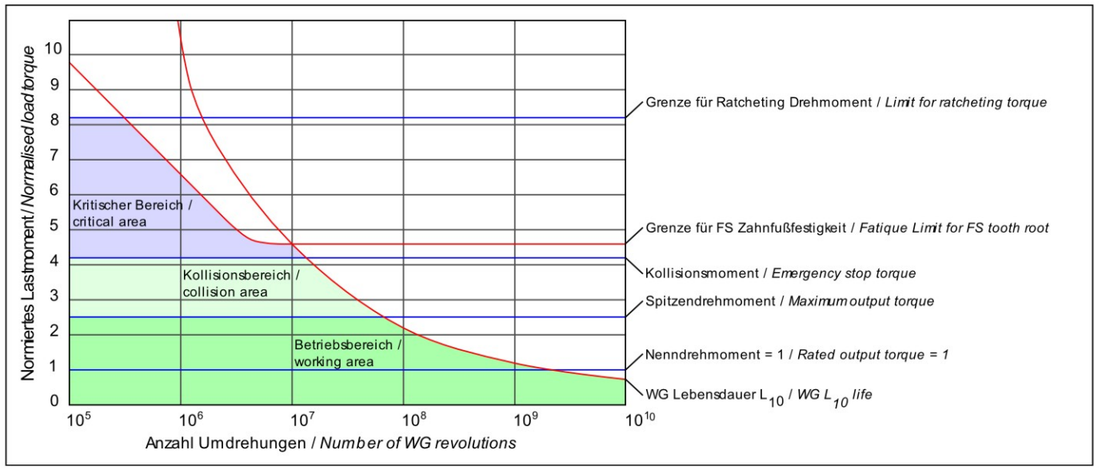

The relationship between load and service life differs for each component in the transmission. Failures usually only occur at the FS or at the shared apartment.In the long run, the FS can generally withstand higher loads than the shared flat. The service life of the shared apartment can be extended by cleaning and changing the grease.

Der Zusammenhang zwischen Belastung und Lebensdauer unterscheidet sich für jedes Bauteil im Getriebe. Zu Ausfällen kommt es in der Regel nur beim FS oder beim WG-Lager. Der FS kann auf Dauer generell höhere Belastungen ertragen, als das WG-Lager. Die Lebensdauer des WG-Lagers kann durch Reinigung und Fettwechsel verlängert werden.

Efficiency Ratio-Speed

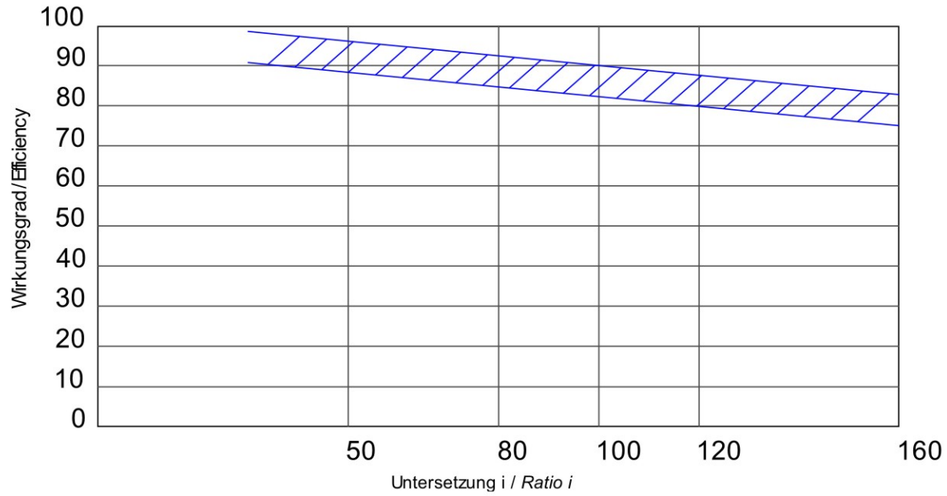

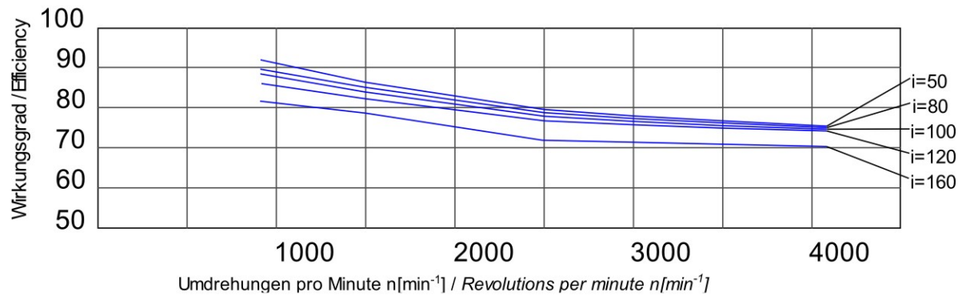

Values apply for an ambient temperature of + 20 ℃.The efficiency increases with increasing temperature (approx. + 10% each 20 ℃).The efficiency decreases with falling temperature (approx. -20% each 20℃).

Werte gelten für eine Umgebungstemperatur von +20℃ . Der Wirkungsgrad steigt mit zunehmender Temperatur (ca. +10% je 20℃).Der Wirkungsgrad verringert sich mit sinkender Temperatur (ca. -20% je 20℃)."

Transmission Accuracy

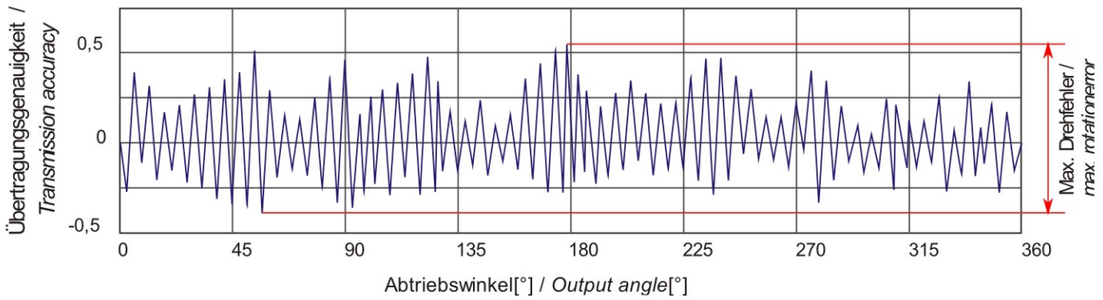

Genauigkeit / *Accuracy Data* [arcmin]			
Baugröße / Size	14	17	≥ 20
Übertragungsgenauigkeit / *Transmission Accuracy*	< 1,5	< 1,5	< 1
Hystereseverlust / *Hysteresis Loss*	< 1		
Lost Motion	< 1		
Wiederholgenauigkeit / *Repeatability*	< ±0,1		

The relationship between load and service life differs for each component in the transmission. Failures usually only occur at the FS or at the shared apartment.
In the long run, the FS can generally withstand higher loads than the shared flat. The service life of the shared apartment can be extended by cleaning and changing the grease.

Der Zusammenhang zwischen Belastung und Lebensdauer unterscheidet sich für jedes Bauteil im Getriebe. Zu Ausfällen kommt es in der Regel nur beim FS oder beim WG-Lager. Der FS kann auf Dauer generell höhere Belastungen ertragen, als das WG-Lager. Die Lebensdauer des WG-Lagers kann durch Reinigung und Fettwechsel verlängert werden.

Torsional Stiffness

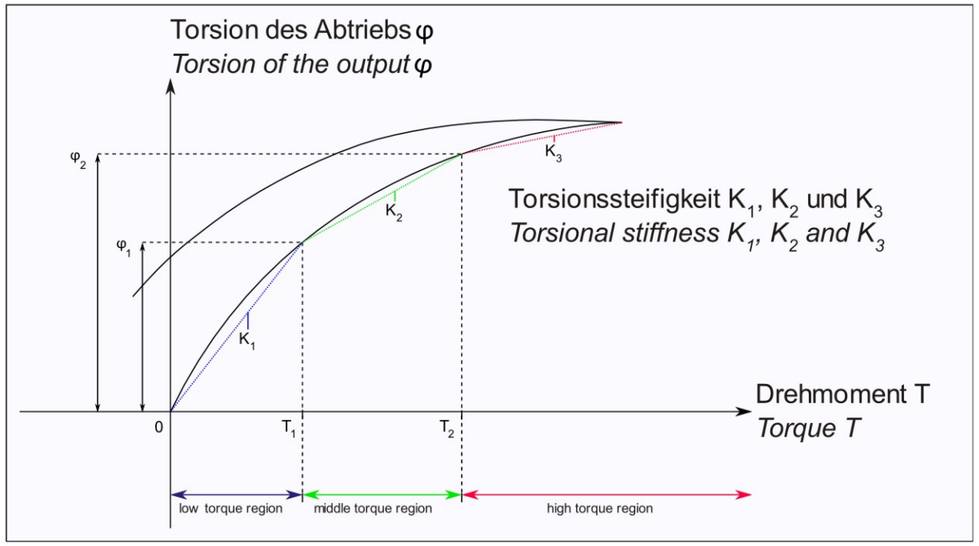

Torsionssteifigkeit / *Torsional Stiffness* [Nm/rad]						
Baugröße / *Size*		14	17	20	25	32
T1 in Nm		2	3,9	7	14	29
T2 in Nm		6,9	12	25	48	108
i = 50	K_3	$8{,}79*10^3$	$1{,}76*10^4$	$2{,}4*10^4$	$4{,}48*10^4$	$9{,}73*10^4$
	K_2	$7{,}25*10^3$	$1{,}49*10^4$	$1{,}88*10^4$	$3{,}44*10^4$	$7{,}75*10^4$
	K_1	$5{,}24*10^3$	$1{,}09*10^4$	$1{,}36*10^4$	$2{,}61*10^4$	$5{,}63*10^4$
i > 50	K_3	$1{,}09*10^4$	$2{,}16*10^4$	$3{,}03*10^4$	$5{,}76*10^4$	$1{,}19*10^5$
	K_2	$9{,}4*10^3$	$1{,}89*10^4$	$2{,}61*10^4$	$5{,}05*10^4$	$1{,}09*10^5$
	K_1	$7{,}25*10^3$	$1{,}35*10^4$	$1{,}67*10^4$	$3{,}23*10^4$	$6{,}99*10^4$

Hysteresis loss

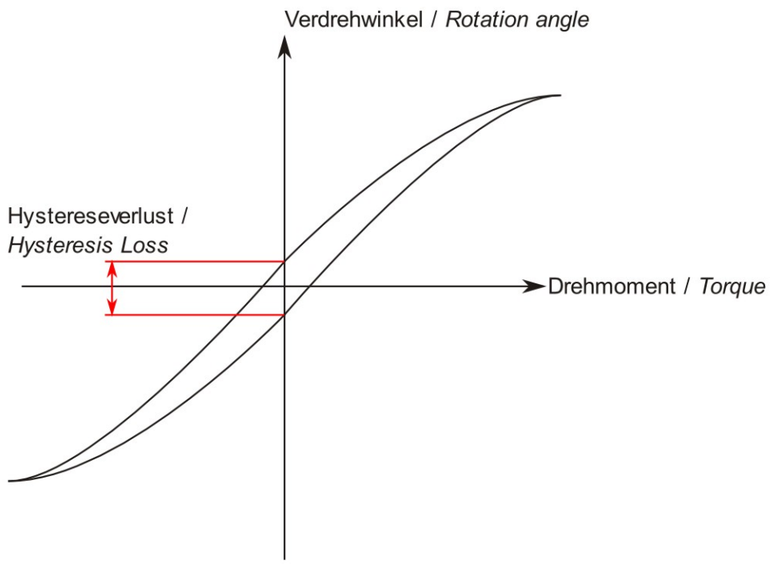

Load Free Starting Torque

Lastfreies Anlaufmoment / Load free starting torque [mNm]					
Baugröße / *Size*	14	17	20	25	32
i = 50	44	86	90	174	359
i = 80	30	56	57	107	220
i = 100	27	48	50	93	208
i = 120	N/A	44	44	85	174
i = 160	N/A	N/A	38	73	162

Output bearing

Lastfaktoren / *Load factors*	x	y
$\frac{F_{a,av}}{F_{r,av} + 2 * \frac{M}{d_p}} \leq 1{,}5$	1	0,45
$\frac{F_{a,av}}{F_{r,av} + 2 * \frac{M}{d_p}} > 1{,}5$	0,67	0,67

Lagertyp / *Bearing type*	B
Kreuzrollenlager / *Cross roller bearing*	$\frac{10}{3}$
Vierpunktlager / *Four point bearing*	3

Lastbedingungen / *Load conditions*	f_w
Keine Stöße und/oder Schwingungen / *No impact loads and/or vibrations*	1 -> 1,2
Normale Belastung / *Normal rotation, normal loads*	1,2 -> 1,5
Stöße und/oder Schwingungen / *Impact loads and/or vibrations*	1,5 -> 3

Zulässiges statisches Kippmoment / *Permissilble static tilting moment*	
L_{OC}	Lebensdauer bei reiner Schwenkbewegung / *Operating life for oscillating motion*
n	Anzahl der Schwingungen/Minute / *Number of oscillations/minute*
C	Dynamische Tragzahl / *Dynamic load rating*
P_C	Dynamische Äquivalentlast / *Dynamic equivalent load*
φ	Schwenkwinkel / *Oscillating angle*
f_w	Betriebsfaktor / *Operating factor*
L_{10}	Lebensdauer / *Operating life*
n_{av}	Durchschnittliche Abtriebsdrehzahl / *Average output speed*
C	Dynamische Tragzahl / *Dynamic load rating*
$F_{r,av}$	Durchschnittliche Radiallast / *average radial force*
$F_{a,av}$	Durchschnittliche Axiallast / *average axial force*
x	Radialkraftfaktor / *Radial load factor*
y	Axialkraftfaktor / *Axial load factor*

Output bearing

$$F_{a,av} = \left(\frac{|n_1| * t_1 * (|F_{a1}|)^B + |n_2| * t_2 * (|F_{a2}|)^B + \cdots + |n_n| * t_n * (|F_{an}|)^B}{|n_1| * t_1 + |n_2| * t_2 + \cdots + |n_n| * t_n} \right)^{\frac{1}{B}}$$

$$F_{r,av} = \left(\frac{|n_1| * t_1 * (|F_{r1}|)^B + |n_2| * t_2 * (|F_{r2}|)^B + \cdots + |n_n| * t_n * (|F_{rn}|)^B}{|n_1| * t_1 + |n_2| * t_2 + \cdots + |n_n| * t_n} \right)^{\frac{1}{B}}$$

$$P_C = x * \left(F_{r,av} + \frac{2M}{d_p} \right) + y * F_{a,av}$$

$$n_{av} = \frac{|n_1| * t_1 + |n_2| * t_2 + \cdots + |n_n| * t_n}{t_1 + t_2 + \cdots + t_n + t_p}$$

$$L_{10} = \frac{10^6}{60 * n_{av}} * \left(\frac{C}{f_w * P_c} \right)^B$$

$$L_{OC} = \frac{10^6}{60 * n} * \frac{180}{\varphi} * \left(\frac{C}{f_w * P_c} \right)^B$$

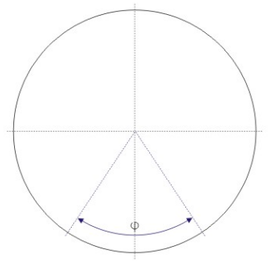

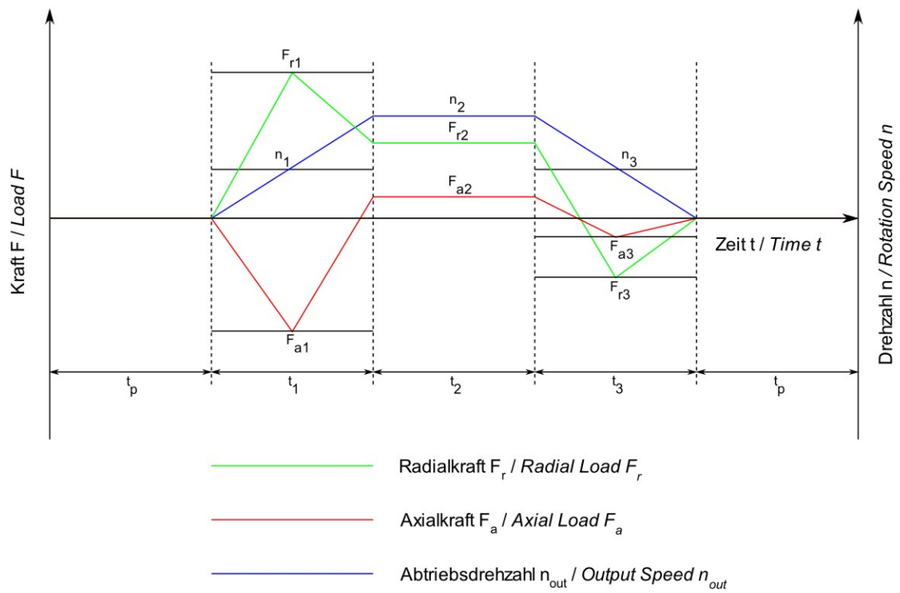

Zulässiges statisches Kippmoment / *Permissilble static tilting moment*	
f_s	Statischer Sicherheitsfaktor / *Static load safety factor*
C_0	Statische Tragzahl / *Static load rating*
F_r	Radiallast / *Radial load*
F_a	Axiallast / *Axial load*
x_0	1
y_0	0,44
P_0	Statische Äquivalentenlast/ Static equivalent load
d_p	Teilkreisdurchmesser des Abtriebslagers / *Pitch circle diameter of the output bearing*
γ	Auslenkungswinkel des Abtriebslagers / *Angle of inclination ot the output bearing*
M	Anliegendes Kippmoment am Abtriebslager / Tilting m*oment acting of the output bearing*
K_B	Kippsteifigkeit des Abtriebslagers / *Moment stiffness of the output bearing*

Betriebsbedingungen des Lagers / *Rotation conditions of bearing*	f_s
Normal / *Normal*	1-2
Stöße/Schwingungen / *Impacts/Vibrations*	2-3
Hohe Übertragungsgenauigkeit/ *High transmission accuracy*	≥ 3

Output bearing

Technische Daten – Kreuzrollenlager [Closed Type]									
Baugröße	Teilkreis	Abstand	Dynamische Tragzahl	Statische Tragzahl	Zulässiges Dynamisches Kippmoment	Zulässiges Statisches Kippmoment[1)]	Kippsteifigkeit	Zulässige Axiallast	Zulässige Radiallast
Size	Pitch Circle	Offset	Dynamic Load Rating	Static Load Rating	Permissible Dynamic Tilting Moment	Permissible Static Tilting Moment[1)]	Moment Stiffness	Permissible Axial Load	Permissible Radial Load
	d_p [mm]	R [mm]	C [N]	C_0 [N]	M [Nm]	M_0 [Nm]	K_B [Nm/arcmin]	F_a [N]	F_r [N]
14	35	9,5	4700	6070	41	70,8	12,7	1010	674
17	42,5	9,5	5290	7550	64	106,9	22,5	1130	758
20	50	9,5	5780	9000	91	150	37,2	1240	828
25	62	11,5	9600	15100	156	312	70,4	2050	1380
32	80	14	15000	25000	313	666,7	156,8	3210	2150

Technische Daten – Kreuzrollenlager [Open Type]									
Baugröße	Teilkreis	Abstand	Dynamische Tragzahl	Statische Tragzahl	Zulässiges Dynamisches Kippmoment	Zulässiges Statisches Kippmoment[1)]	Kippsteifigkeit	Zulässige Axiallast	Zulässige Radiallast
Size	Pitch Circle	Offset	Dynamic Load Rating	Static Load Rating	Permissible Dynamic Tilting Moment	Permissible Static Tilting Moment[1)]	Moment Stiffness	Permissible Axial Load	Permissible Radial Load
	dp [mm]	R [mm]	C [N]	C0 [N]	M [Nm]	M0 [Nm]	KB [Nm/arcmin]	Fa [N]	Fr [N]
14	50	21,6	5800	8600	74	143	24,7	775	517
17	60	22,3	10400	16300	124	326	44,8	2220	1490
20	70	26,6	14600	22000	187	513	73,3	3120	2090
25	85	29,7	21800	35800	258	1014	111,1	4660	3120
32	111	40,4	38200	65400	580	2420	290,9	8170	5470

[1)] Die Werte basieren auf einem stat. Sicherheitsfaktor von 1,5

Input and output arrangement

Zulässiges statisches Kippmoment / *Permissilble static tilting moment*	
T	Drehmoment / *Torque*
t	Zeit / *Time*
n	Drehzahl / *Rotational speed*
T_N	Nenn-Drehmoment / *Rated torque*
T_{av}	Durchschnitts-Drehmoment / *Nominal torque*
T_S	Spitzendrehmoment / *Maximum torque*
T_K	Kollisionsmoment / *Emergency stop torque*
n_{av}	Durchschnittliche Drehzahl / *Average rotational speed*
$T_{out,av}$	Durchschnittliches Drehmoment am Abtrieb/ *Nominal output Torque*
$n_{out,av}$	Durchschnittliche Abtriebsdrehzahl / *Average output rotational speed*
$n_{in,av}$	Durchschnittliche Antriebsdrehzahl / *Average input rotational speed*
i	Übersetzung / *Ratio*
$n_{out,max}$	Maximale Abtriebsdrehzahl / Maximum *output rotational speed*
$n_{in,max}$	Maximale Antriebsdrehzahl / Maximum *input rotational speed*
$T_{out,max}$	Maximales Drehmoment am Abtrieb / *Maximum output torque*
$T_{out,K}$	Kollisionsmoment am Abtrieb / *Emergency stop torque at output*
n_N	Nenn-Drehzahl / Rated *rotational speed*
L_{50}	Lebensdauer mit 50% Ausfallwahrscheinlichkeit / *Lifetime with 50% probability of failure*
L_n	Lebensdauer / *Service life*

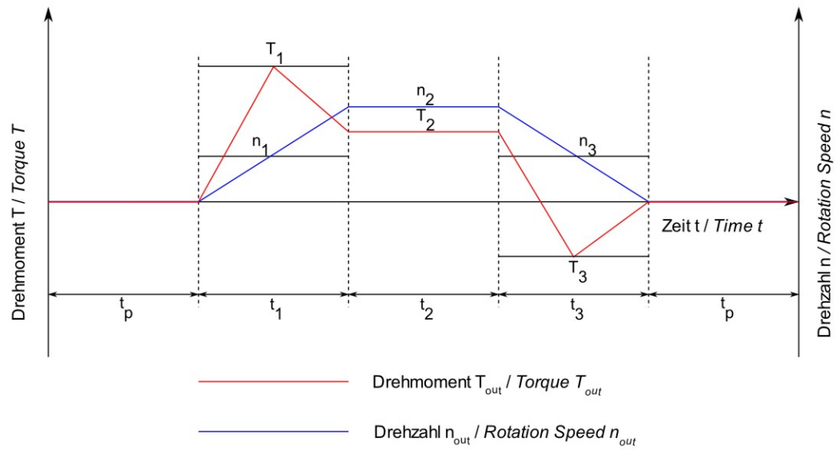

Assembly Accuracy

C-MC Component Kit

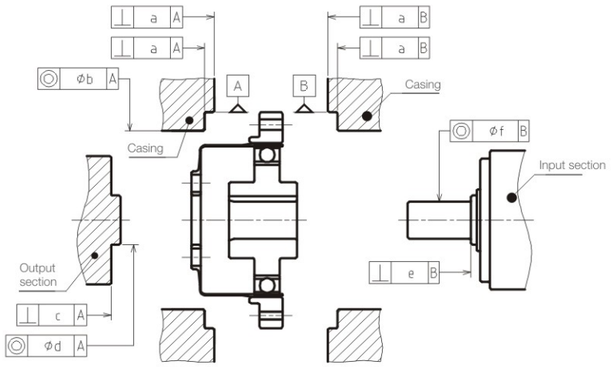

C-MC [mm]

Size	14	17	20	25	32
a	0.015	0.015	0.018	0.018	0.023
b	0.016	0.020	0.020	0.024	0.024
c	0.010	0.012	0.014	0.016	0.020
d	0.013	0.013	0.015	0.018	0.020
e	0.012	0.012	0.014	0.016	0.016
f	0.016	0.020	0.024	0.024	0.024

SB Simplicity box

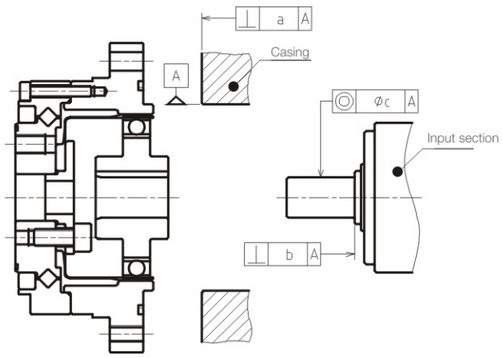

SB Simplicity box [mm]

Size	14	17	20	25	32
a	0.020	0.020	0.020	0.025	0.025
b	0.012	0.012	0.014	0.016	0.016
c	0.016	0.020	0.024	0.024	0.024

B Box Unit

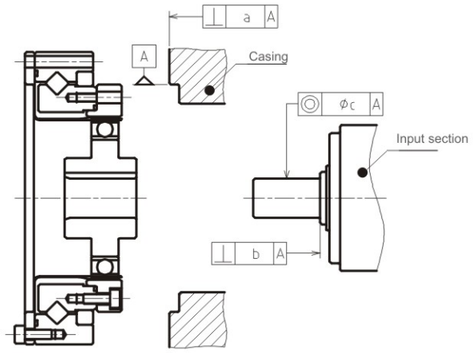

B Box Unit [mm]

Size	14	17	20	25	32
a	0.020	0.020	0.020	0.025	0.025
b	0.012	0.012	0.014	0.016	0.016
c	0.016	0.020	0.024	0.024	0.024

Caution During Installation

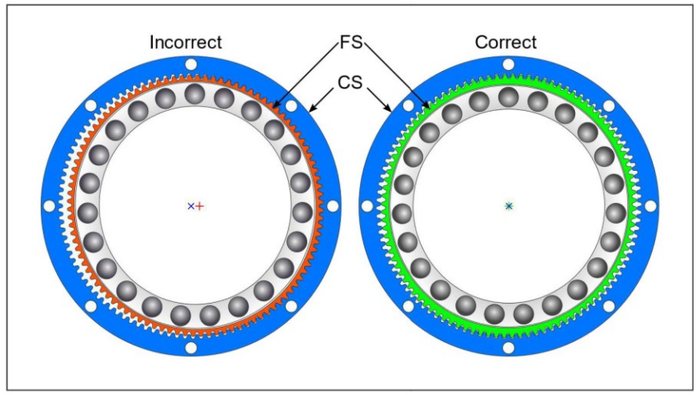

Bei der Montage des Getriebes ist darauf zu Achten, dass der FS mittig im CS sitzt. Es kann passieren, dass der FS auf einer Seite einen Zahn überspringt.
Man spricht hierbei vom sogenannten Dedoidal. Hierbei kann es zu einer Vielzahl von Problemen bis hin zum Ausfall des gesamten Getriebes kommen.
When installing the gearbox, make sure that the FS is seated in the center of the CS. It can happen that the FS skips a tooth on one side. This is called the so-called dedoidal. This can lead to a variety of problems, including failure of the entire transmission.

Motor Installation Procedure

Procedure 1

- Attach the flange on to the motor
- Attach the cam with elastic bearings to the motor shaft
- Attach the unit

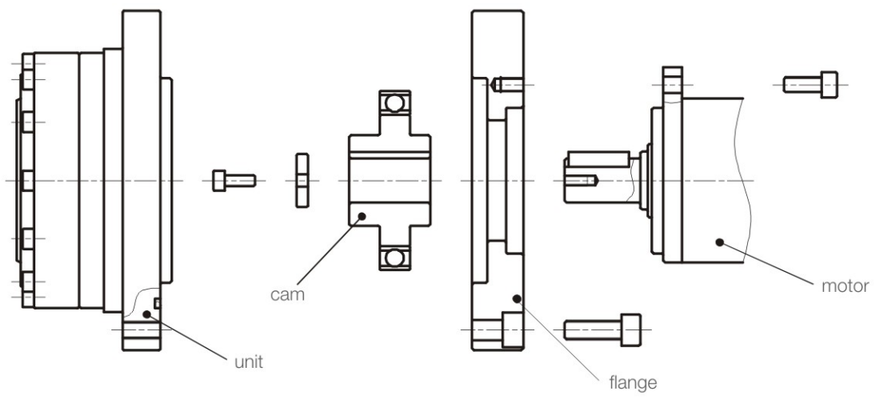

Procedure 2

- Attach the cam with elastic bearings to the motor shaft
- Attach the flange on to the motor
- Attach the unit

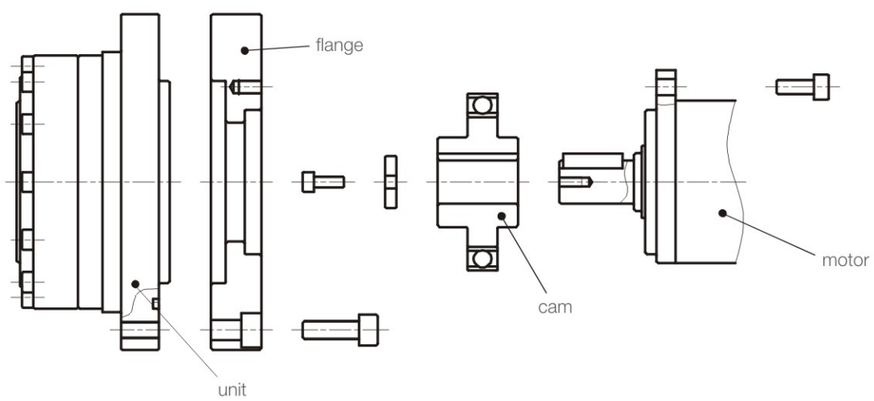

Technical Memo